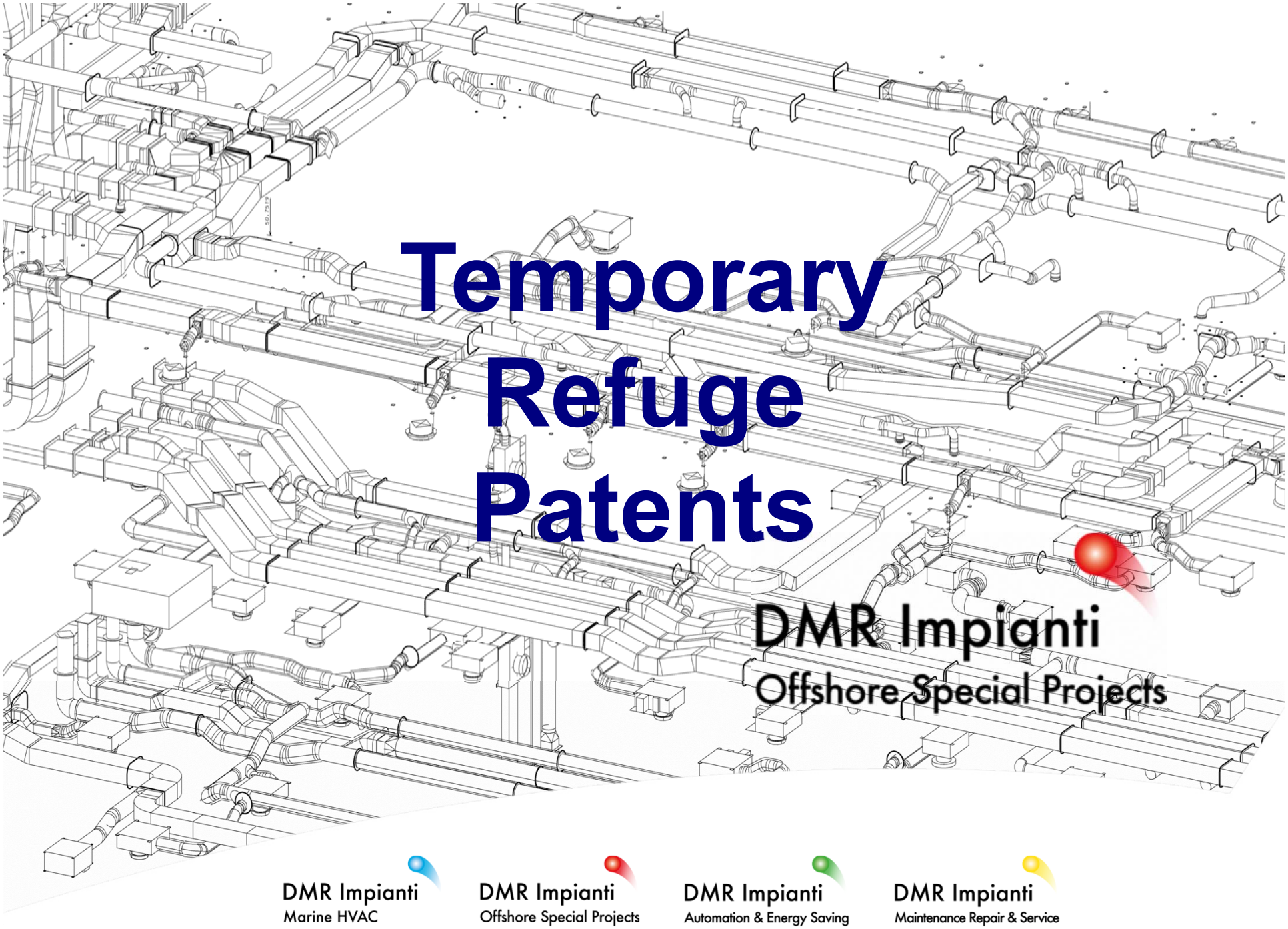

Temporary Refuge Patents

DMR Impianti
Offshore Special Projects

DMR Impianti
Marine HVAC

DMR Impianti
Offshore Special Projects

DMR Impianti
Automation & Energy Saving

DMR Impianti
Maintenance Repair & Service

PRESSURE REDUCTION PANELS

The pressure reduction panel is one of the most system critical items. After various tests with our DMR test skid the high pressure reduction valve gasket material has been defined.

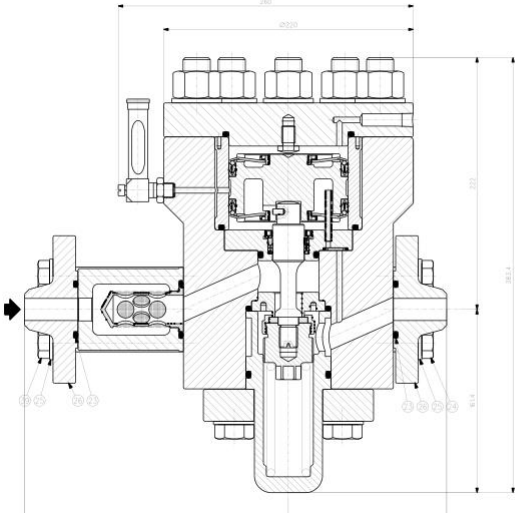

HP Pressure Reduction Valve 300- 60 bar Scheme

D.M.R. Impianti is glad to introduce the upgrades developed and patented by our Mr. Luca Garbarino which can be implemented both on marine and ground mounted Temporary Refuges being them of the static type (like on Ersai 400) or of the mobile type (like IBEEV):

SHELTER BREATH - Patent GE2009A000045

MOTOR BREATH - Patent GE2009A000047

MOTOR ROOM UN-SPARKING - Patent GE2009A000046

SHELTER BREATH - Patent GE2009A000045

NITROX APPLICATION FOR TEMPORARY REFUGES OXIGENATION

The idea is to use the a safe nitrogen/oxygen mixture to supply oxygen to any Temporary Refuge.

People, living an emergency inside a TR, needs a continuous supply of air for TR pressurization and human breath; this requires the storage of a very large amount of breathable air.

The first evolution of the TR, applied on ERSAI 400 construction, is the reduction of the breathable air storage, dividing the supply in pressurization air, available also for human breath and an independent oxygen supply to assure the correct oxygen content also in the case of larger oxygen use; this solution has the advantage of a sensible reduction of the breathable air storage, but requires the availability of a small medical grade oxygen supply.

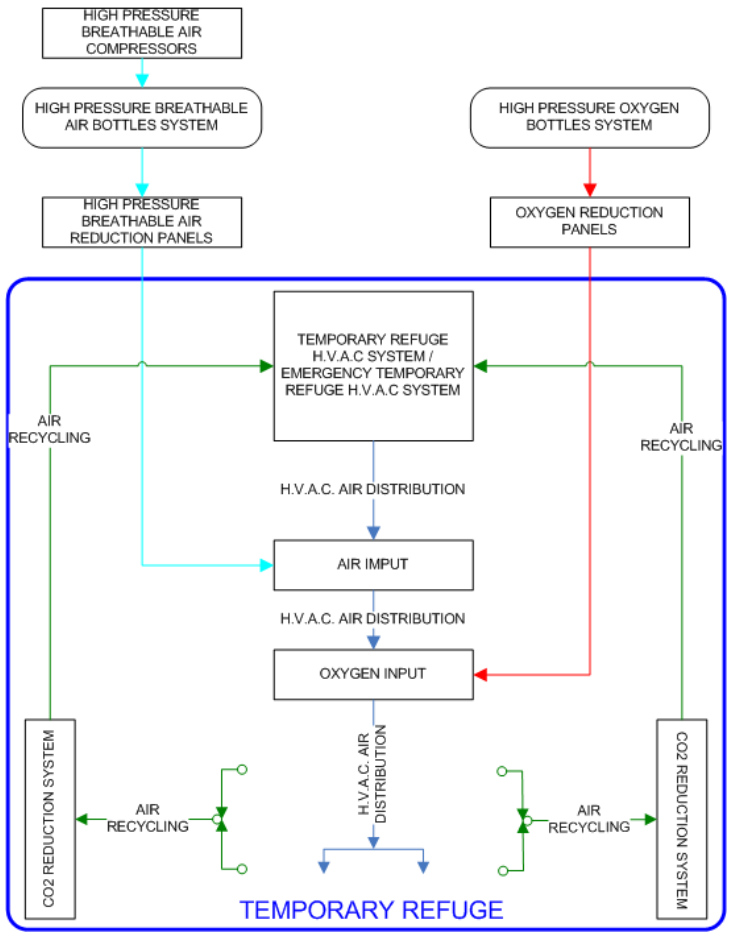

SHELTER BREATH - Patent GE2009A000045

NITROX APPLICATION FOR TEMPORARY REFUGES OXIGENATION

The storage of a small amount of oxygen can create unavailability of TR and risk during restoring operation.
The second evolution of TR doesn't require the storage of medical grade oxygen since TR supply of pure oxygen can be safely replaced by a high oxygen content mixture.
In diving field this mixture is known as Nitrox.
Nitrox can be produced on site, stored and managed as compressed breathable air.

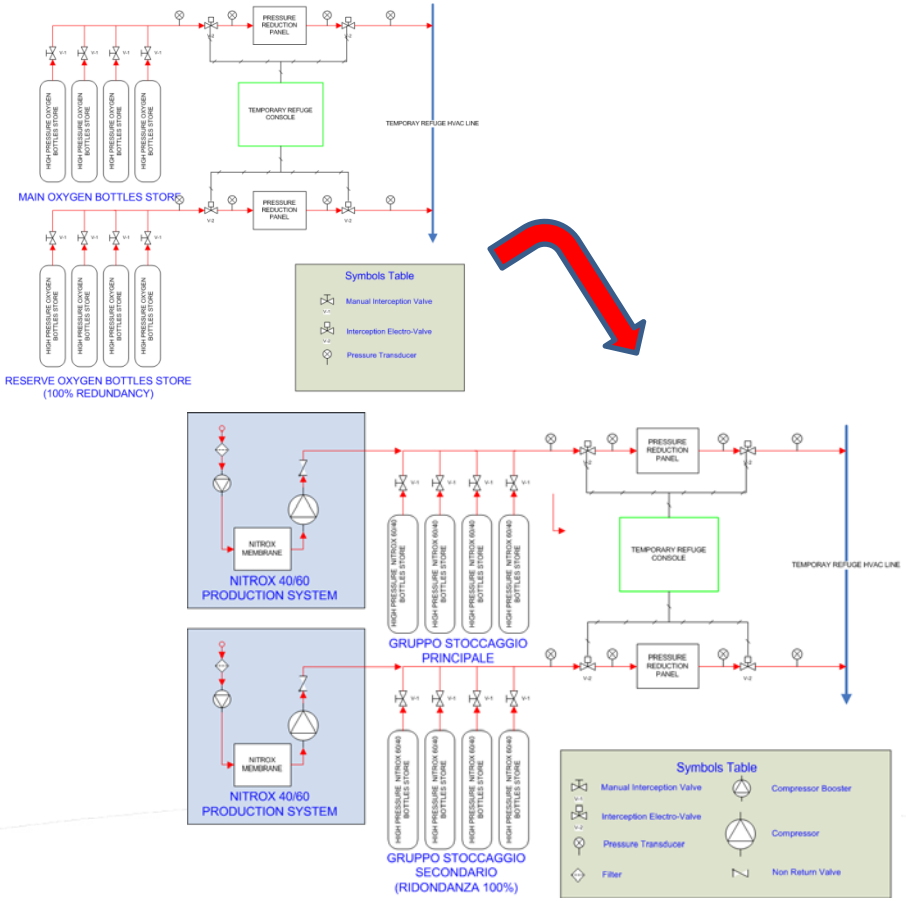

MOTOR BREATH - Patent GE2009A000047

IMPLEMENTATION OF MOTOR SUPPLY SYSTEM

The present patent refers to an implementation of motor supply.
A diesel motor needs a continuous availability of gasoline and air, a mixture of nitrogen and oxygen.
Gasoline is the fuel, oxygen is oxidizing and nitrogen is the inerting of the reaction, to avoid a destructive event.

The limit of this idea, to store air in pressurized cylinders is that only the 21 % of the stored and useful material if the oxidizing, as to say the material needed for the combustion.
According to available information, this idea was applied for the first time at the Russian submarine Pochtovy as late as 1908.

MOTOR ROOM UN-SPARKING - Patent GE2009A000046

INERTIZZATION OF HOT SPOTS WITH ENGINE EXHAUST GASES

The idea is very simple, since on board, pressurization of unmanned rooms, requires air that must be used for primary scopes, as engine supply and people breathing, the pressurization can be accomplished by inerting.
This can be made using the exhaust gases.

Exhaust gases move in three directions:

- **dilution of Nitrox for engine supply;**
- **pressurization and inerting of unmanned rooms, where hot spots are present as switches, thermal motors, electrical motors, electronic components, ….**
- **discharge to the environment**

DMR Impianti
Offshore Special Projects

Patent Advantages - 1/2

NITROX APPLICATION ADVANTAGES FOR TEMPORARY REFUGES OXIGENATION SHELTER BREATH - Patent GE2009A000045

- continuous availability of TR
- no pure oxygen on board
- no operation on pure oxygen bottles
- no operation on pure oxygen junctions
- no risk due to pure oxygen leakage
- no risk due to heavy objects movement
- no risk due to oxygen storage room ventilation
- no risk due to embrittlement of bottles steel for low temperature

DMR Impianti
Offshore Special Projects

Patent Advantages - 2/2

MOTOR BREATH ADVANTAGES - MOTOR BREATH - Patent GE2009A000047

- possibility to use the same fuel during standard and emergency operation
- no risk due to compressed oxygen
- no requirement to increase vessel dimension
- possibility to restart a motor during emergency
- no risk due to compressed hydrogen
- possibility to maintain the system always available without risk operation
- possibility to restore the system after an emergency without risk operation
- no need of dedicated ventilation for storage bottles

MOTOR ROOM UN-SPARKING - MOTOR ROOM UN-SPARKING - Patent GE2009A000046

- continuous availability of large amount of gas
- low content of oxygen
- no special tool required for exhaust gases management

DMR Impianti S.r.l.

DMR Impianti
Offshore Special Projects

REFERENCE CONTACTS

For any question about Temporary Refuge Concepts please contact Mr. Luca Garbarino at info@dmr-impianti.it tel + 39 010 899 46 00